T-Cube Web Tool for rapid detection of disease outbreaks in India and Sri Lanka

eHealth Sri Lanka - 2010

September 15 and 16, 2010

Water's Edge, Sri Lanka

Mr. Chamindu Weerasinghe

LIRNE*asia*

Email: chamindu@lirneasia.net

Mobile: +94718081434 (lk)

This work was carried out with the aid of a grant from the International Development Research Centre, Canada.

T-Cube Web Interface (TCWI) by *Auton Lab*

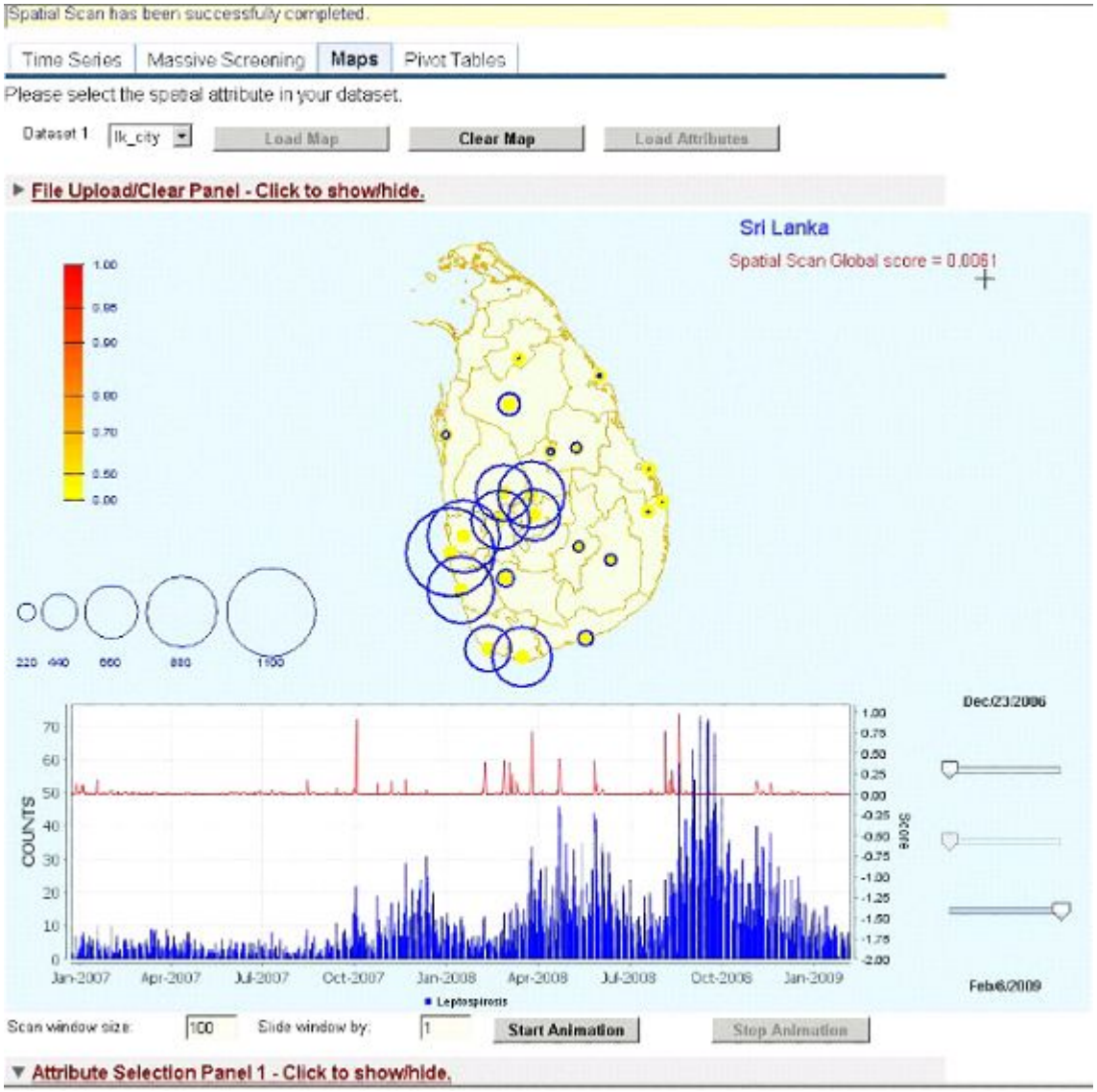

- AD Tree data structure
- Trained Bayesian Networks
- Fast response to queries
- Statistical estimations techniques
- Data visualization over temporal and spatial dimensions
- Automated alerts

LIRNEasia
www.lirneasia.net

Our pilot in India and Sri Lanka

- 24 Health Sub Center Village Nurses
- 4 Public Health Center Sector Health Nurses, Health Inspectors, and Data Entry Operators
- 1 Integrated Disease Surveillance Program Unit of the Deputy Director of Health Services
- Thirupathur Block, Sivagangai District, Tamil Nadu, India

- 12 District/Base Hospitals and Clinics
- 15 Sarvodaya Suwadana Center Assistants
- 4 Medical Officer of Health divisions & 1 Regional Epidemiology Unit
- Kurunegala District, Wayamba Province, Sri Lanka

Data collection, Event detection, and Situational-Awareness/Alerting in RTBP

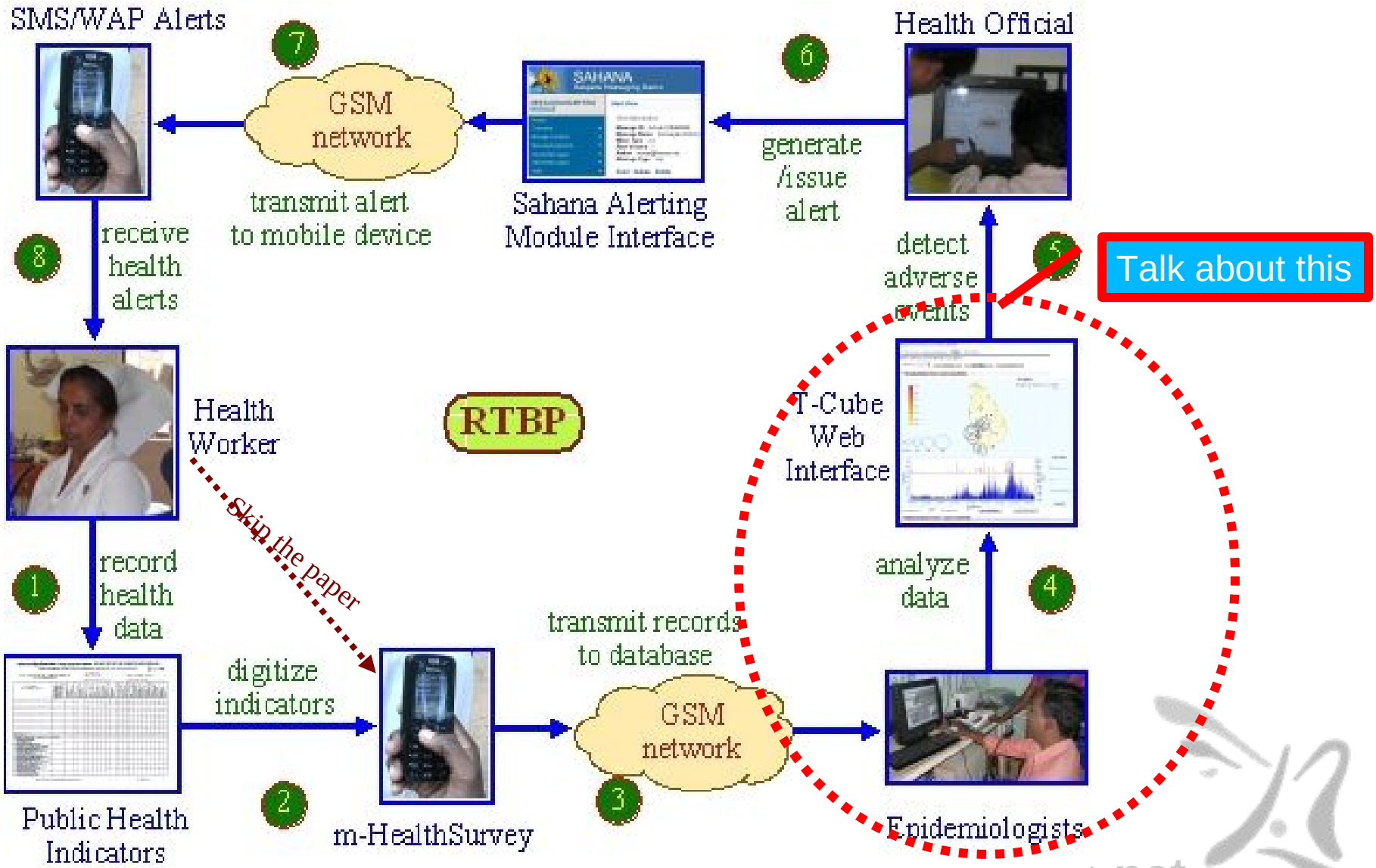

T-Cube Web Interface – Massive Screening

Welcome to the T-Cube Web Interface

Please do not click on the Back/Forward/Refresh buttons during the use of this interface.

File loading completed successfully.

Time Series

▼ Datasets

-- Choose Preloaded File --

-- Choose Preloaded File --
SriLanka-current.tcube
TamilNadu-current.tcube
lk_flat_table_2010-09.tcube

Select any sample file to load.

Upload File...

Clear Data

T-Cube Name 1: lk

Select TCube: lk

Select attributes (upto3) and specific values(optional) to run massive screening.

Auto Filter

disease, age_grp, location, month, dow
dis_priority, qtr, gender, year, sign
symptom

Window Options

Scan window sizes: 7

Minimum Support: 0

Most significant window only

Last Day Only

Use Adaptive Baseline

Date Range Options

Period of Analysis
Start Date: 09/22/2009
End Date: 08/31/2010

Period of Reference
Start Date: 09/22/2009
End Date: 08/31/2010

Other Options

Pvalue Threshold: 0.05

Scan Option: Upper Tail

Baseline: All Data

Reference Type: All Past

Reference Window: 28 Lag: 0

Use Drill-Down

Run Screening

T-Cube Web Interface – Predefine Scan

▼ Screening Results

The following screenings are available:

Escalating Fever Diseases

Escalating Non-communicable Diseases

Escalating Notifiable Diseases

Escalating other communicable Diseases

This screening shows data about diseases classified as high-impact and notifiable. It will show instances of these disease that have been statistically unusual recently.(21 queries)

Id	Query	Date	PValue	Window	Count	Expected Count	Ranked PValue ▲	Alt Date	Alt PValue	Alt Window
1	disease=(Chicken_Pox),age_grp=(15-20),dis_priority=(Notifiable)	08/31/2010	3.798E-5	21	4	0.06	2.899E-3			
2	disease=(Chicken_Pox),age_grp=(15-20),location=(Sandalankawa),dis_priority=(Notifiable)	08/31/2010	3.094E-4	21	3	0	2.899E-3			
3	age_grp=(15-20),location=(Sandalankawa),dis_priority=(Notifiable)	08/31/2010	2.788E-3	21	3	0.14	2.899E-3			
4	location=(Sandalankawa),dis_priority=(Notifiable)	08/31/2010	4.694E-3	21	4	0.51	2.899E-3			
5	disease=(Chicken_Pox),location=(Sandalankawa),dis_priority=(Notifiable)	08/31/2010	5.295E-3	21	3	0.22	2.899E-3			
6	age_grp=(15-20),dis_priority=(Notifiable)	08/31/2010	1.000E-2	28	9	3.26	2.899E-3			

On 08/31/2010, we note that the counts in last 21 days are significantly higher than expectation. The chance of seeing anything more extreme is about one in 26,000 cases.

Prev 10

Next 10

Dump Query | Use For Drill-Down | Save To List | Name: Escalating Notifiable Disea | Save Results to File | Print List

T-Cube Web Interface – Spatio – Temporal Presentation

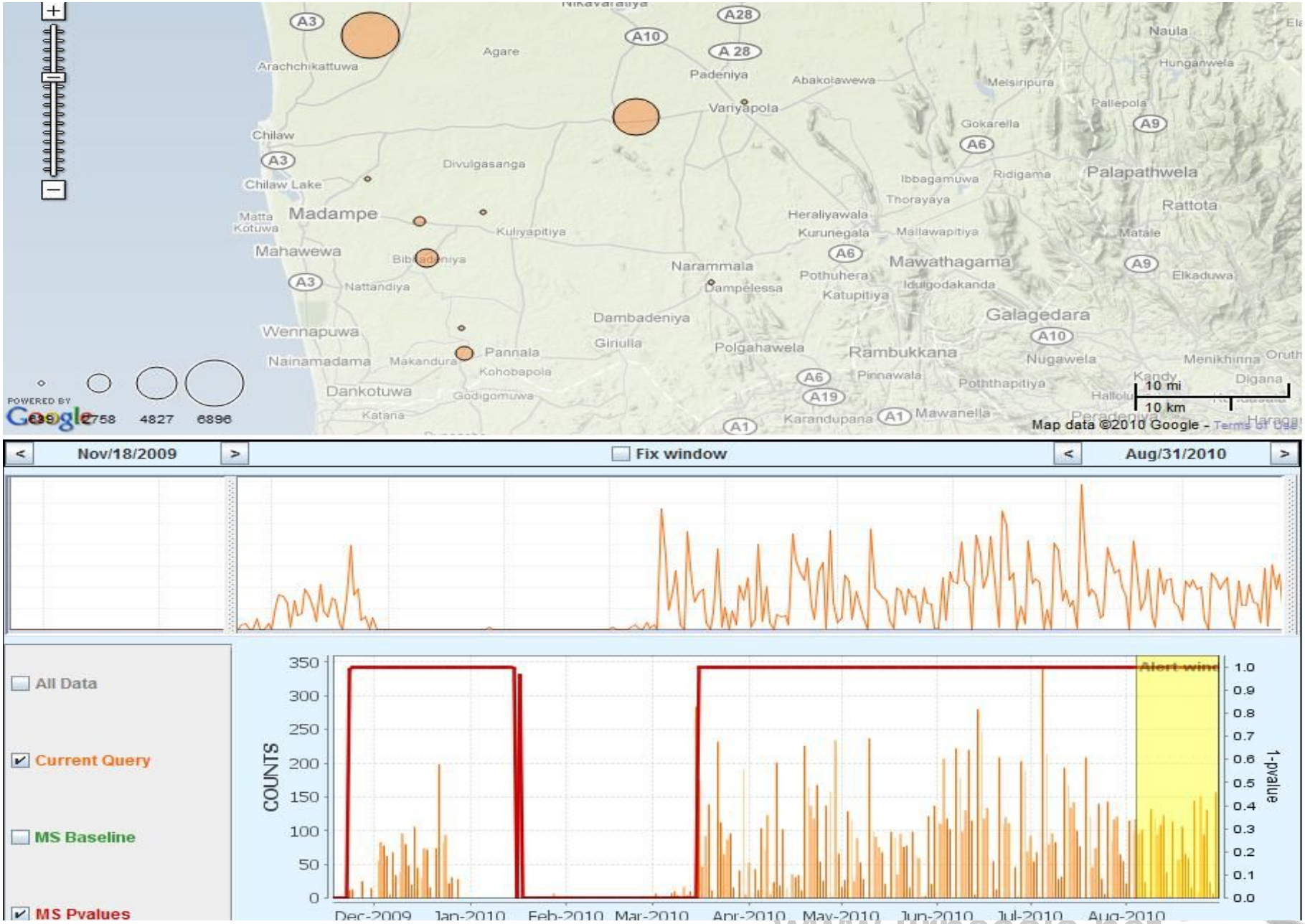

T-Cube Web Interface – Other Statistical Analysis

▼ Analysis

T-Cube Name: lk

Save Counts to File | Save Map To File | Scaling: Auto | Log Scale | Linear Scale

Select Target:
- All Data
- Current Query
- MS Baseline
- MS Pvalues

Create New | Update

Choose Method: Arithmetic Operations
- Moving Average
- Moving Sum
- CuSum
- Temporal Scan
- Linear Trend
- Spatial Scan
- Arithmetic Operations

Series name: ari | Current Query | Auto update on target change

Arithmetic operati | arget 2: All Data

Submit

▼ Drill Down on Query

T-Cube Name: lk

Reset Query | Show Query | Values | Selection | 0/283 values. 0/11 attributes. | Name: query-1 | Save

Auto Filter

disease	age_grp	location	month	dow
dis_priority	qtr	gender	year	sign
symptom				

T-Cube Web Interface – Pivot Table

▼ Pivot Table

Select TCube: Ik

PreLoaded Table Name	Description	
disease vs age_grp vs gender	This pivot table shows disease vs age_grp vs gender for the last 7 days.	Bihalpola Bopitiya Dunakadeniya Horathapola
H399 - Weekly Return of Notifiable Diseases	This pivot table shows disease vs location for Notifiable Diseases for the last 7 days.	

Filter Query: All Data

Attributes: age_grp dis_priority dow gender month qtr sign symptom year

Rows: location

Columns: disease

Selected Time Span - Start Date(mm/dd/yyyy) 08/25/2010 End Date(mm/dd/yyyy) 08/31/2010

Sort Order: Alphabetic Numeric

Remove zeros in rows/columns: Yes No

Submit Reset Save to File

	Chicken_Pox	Dysentery	Total
Katupotha	0	1	1
Sandalankawa	2	0	2
Total	2	1	3

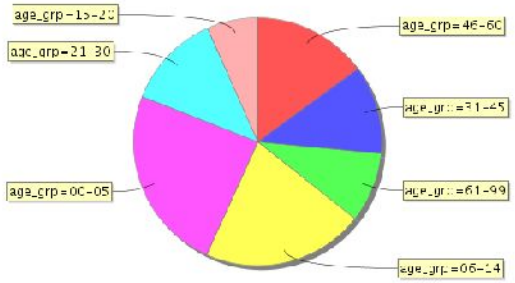

Attributes: dis_priority dow location month qtr sign symptom year

Rows: disease

Columns: age_grp gender

Selected Time Span - Start Date(mm/dd/yyyy) 08/14/2010 End Date(mm/dd/yyyy) 08/20/2010

Sort Order: Alphabetic Numeric

Remove zeros in rows/columns: Yes No

Submit Reset Save to File

	46-60		31-45		61-99		06-14		00-05		21-30		15-20		Unknown	Total
	Female	Male	Female	Male	Female	Male	Female	Male	Female	Male	Female	Male	Female	Male	Female	
Fever	44	36	50	30	23	20	45	56	49	65	34	36	28	13	1	500
Unknown	113	49	62	29	61	26	18	26	20	32	25	19	12	10	0	502
Upper_Respiratory_Tract_Infection	89	18	56	17	51	18	63	42	19	20	53	23	7	10	0	486
Respiratory_tract_infection	39	27	35	16	26	16	43	50	61	46	37	18	11	18	0	441
Wound			23	34	18	28	43	44	13	12	28	23	6	23	0	391
Cough			33	21	16	4	43	28	56	37	23	21	16	13	0	345
Worm_Infestation			36	11	10	6	45	29	11	12	23	10	40	7	0	275
Arthritis			12	4	59	20	1	0	0	0	2	1	0	1	0	226
Hypertension			13	3	91	36	0	0	0	0	0	0	0	0	0	219
Joint_pain			27	17	16	8	4	0	0	0	10	1	4	1	0	133
Flu			11	0	1	0	8	9	43	24	4	5	7	3	0	121
Gastritis			25	5	12	5	1	3	0	0	12	19	3	6	0	118
Rash			12	17	3	3	12	4	8	7	5	5	5	7	0	110
Bronchial_asthma			11	5	12	8	12	11	2	8	5	1	7	3	0	105
Tonsilitis	8	7	22	9	2	4	11	2	0	2	3	8	6	3	0	92

Show Pie Chart
or
Add Pivot Attribute

dis_priority
dow
location
month
qtr
sign
symptom
year

Sri Lanka Epidemiology and RTBP overlay

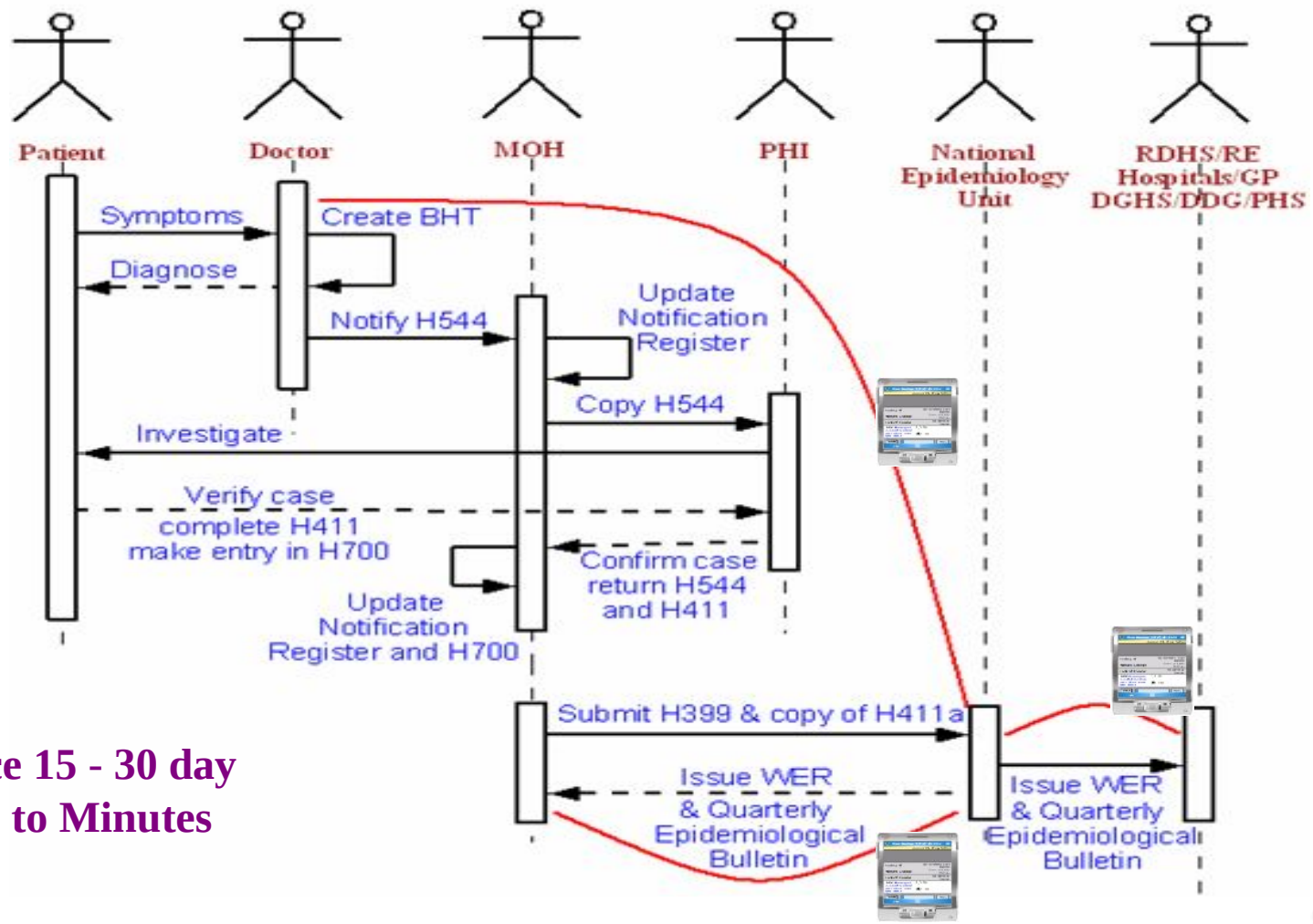

Reduce 15 - 30 day delays to Minutes

Black arrows: current manual paper/postal system for health data collection and reporting

Red lines: RTBP mobile phone communication system for heath data collection and reporting

References related to RTBP

[1] S. Prashant and N. Waidyanatha (2010). User requirements towards a biosurveillance program, Kass-Hout, T. & Zhang, X. (Eds.). Biosurveillance: Methods and Case Studies. Boca Raton, FL: Taylor & Francis, Chapter 13, pp .240-263.

[2] Kannan T., Sheebha R., Vincy A., and Nuwan Waidyanatha (2010). Robustness of the mHealthSurvey midlet for Real-Time Biosurveillance, Proceedings of the 4th IEEE International Symposium on Medical Informatics and Communication Technology (ISMICT '10), Taipei, Taiwan.

[3] M. Sabhnani, A. Moore, and A. Dubrawski (2007). Rapid processing of ad-hoc queries against large sets of time series. Advances in Disease Surveillance, Advances in Disease Surveillance, Vol 2, 2007.

[4] S. Ray, A. Michalska, M. Sabhnani, A. Dubrawski, M. Baysek, L. Chen, J, and Ostlund (2008). T-Cube Web Interface: A Tool for Immediate Visualization, Interactive Manipulation and Analysis of Large Sets of Multivariate Time Series, AMIA Annual Symposium, 2008:1106, Washington, DC, 2008.

[5] A. Dubrawski, M. Sabhnani, S. Ray, J. Roure, and M. Baysek (2007). T-Cube as an Enabling Technology in Surveillance Applications. Advances in Disease Surveillance 4:6, 2007.

[6] G. Gow and N. Waidyanatha (2010). Using Common Alerting Protocol To Support A Real-Time Biosurveillance Program In Sri Lanka And India, Kass-Hout, T. & Zhang, X. (Eds.). Biosurveillance: Methods and Case Studies. Boca Raton, FL: Taylor & Francis, Chapter 14, pp 268-288.

[7] G. Gow, Vincy. P.., and N. Waidyanatha (2010). Using mobile phones in a Real-Time Biosurveillance Program: Lessons from the frontlines in Sri Lanka and India. Proceedings of the 2010 IEEE International Symposium on Technology and Society (ISTAS '10), New South Wales, Australia.

[8] Ganesan M., S. Prashant, Janakiraman N., and N. Waidayanatha (2010), Real-time Biosurviellance Program: Field Experiences from Tamil Nadu, India. *IASSH conference paper*. Varanasi, Uttarpradesh, India.

[9] A. Dubrawski (2009). Detection of Events in Multiple Streams of Surveillance Data. In Infectious Disease Informatics: Public Health and Biodefense, Eds. C. Castillo-Chavez, H. Chen, W. Lober, M. Thurmond, and D. Zeng. Springer-Verlag (in press).

[10] D. Neill, and G. Cooper (2009). A Multivariate Bayesian Scan Statistic for Early Event Detection and Characterization. Machine Learning (in press).

[11] M. Wagner (2008). Methods for testing Biosurveillance systems, Handbook of Biosurveillance (eds. Wagner, M., Moore, M., and Aryel, R.), pp 507-515, Elsevier academic press.

Go To our Blog

Search with key terms:

real-time biosurveillance, mhealth, outbreak detection, common alerting protocol, alerting, situational awareness, mHealthSurvey, T-cube, Sahana Messaging Module

Thank you!